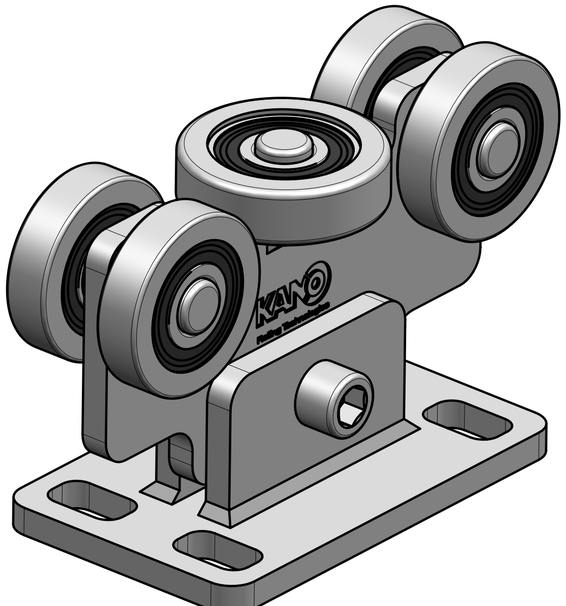
KANO
Rolling Technologies

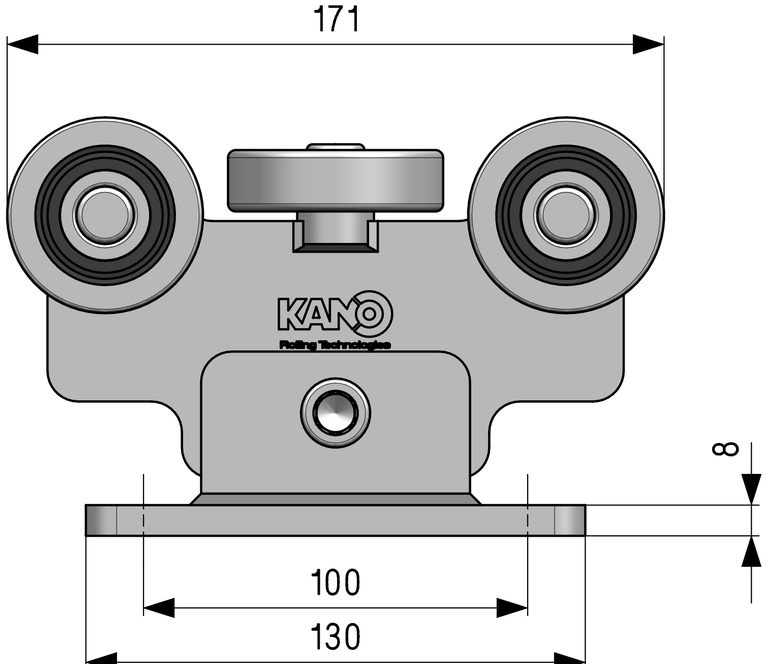
171
KANO
Rolling Technologies
8
100
130

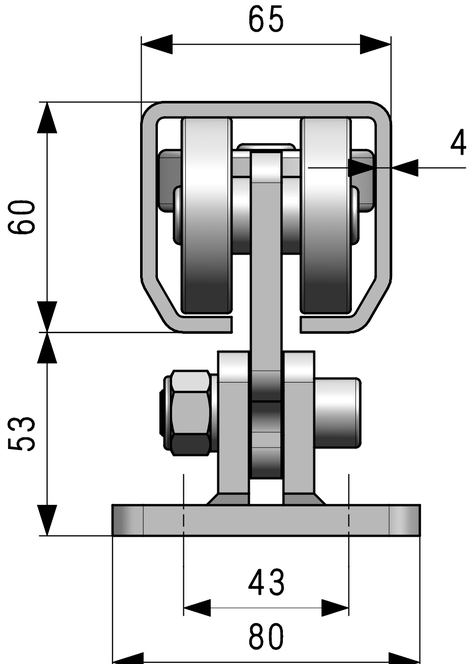
65
4
60
53
43
80